DG10BS

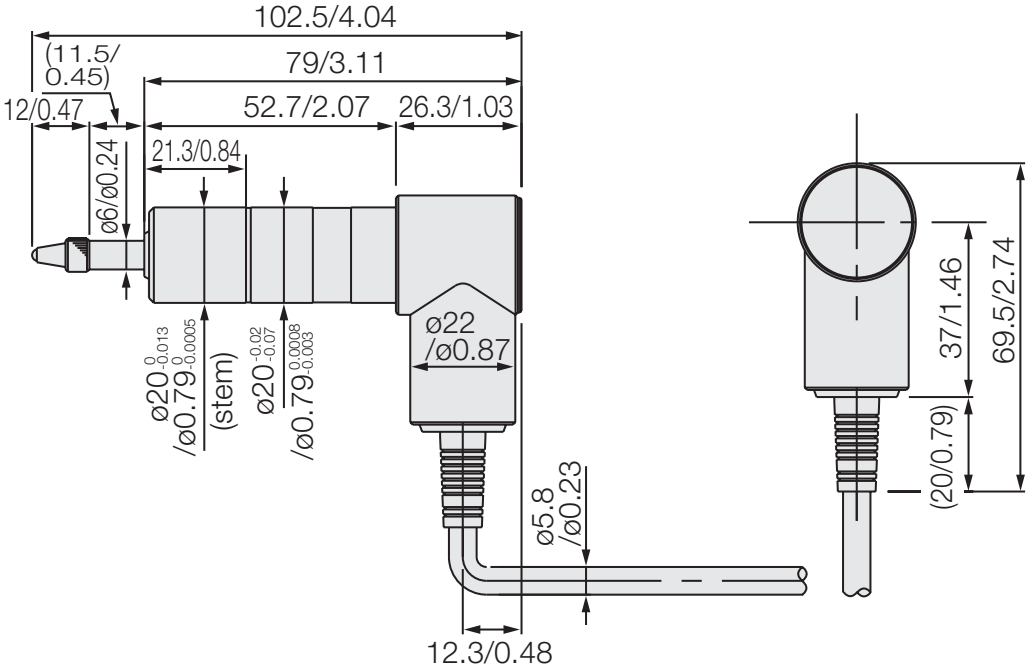
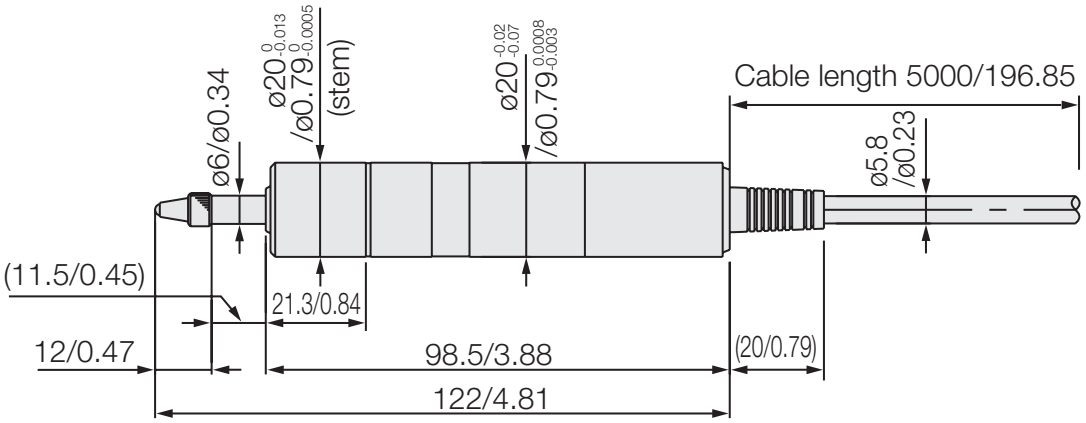
DG10BN/BP