Dimensions

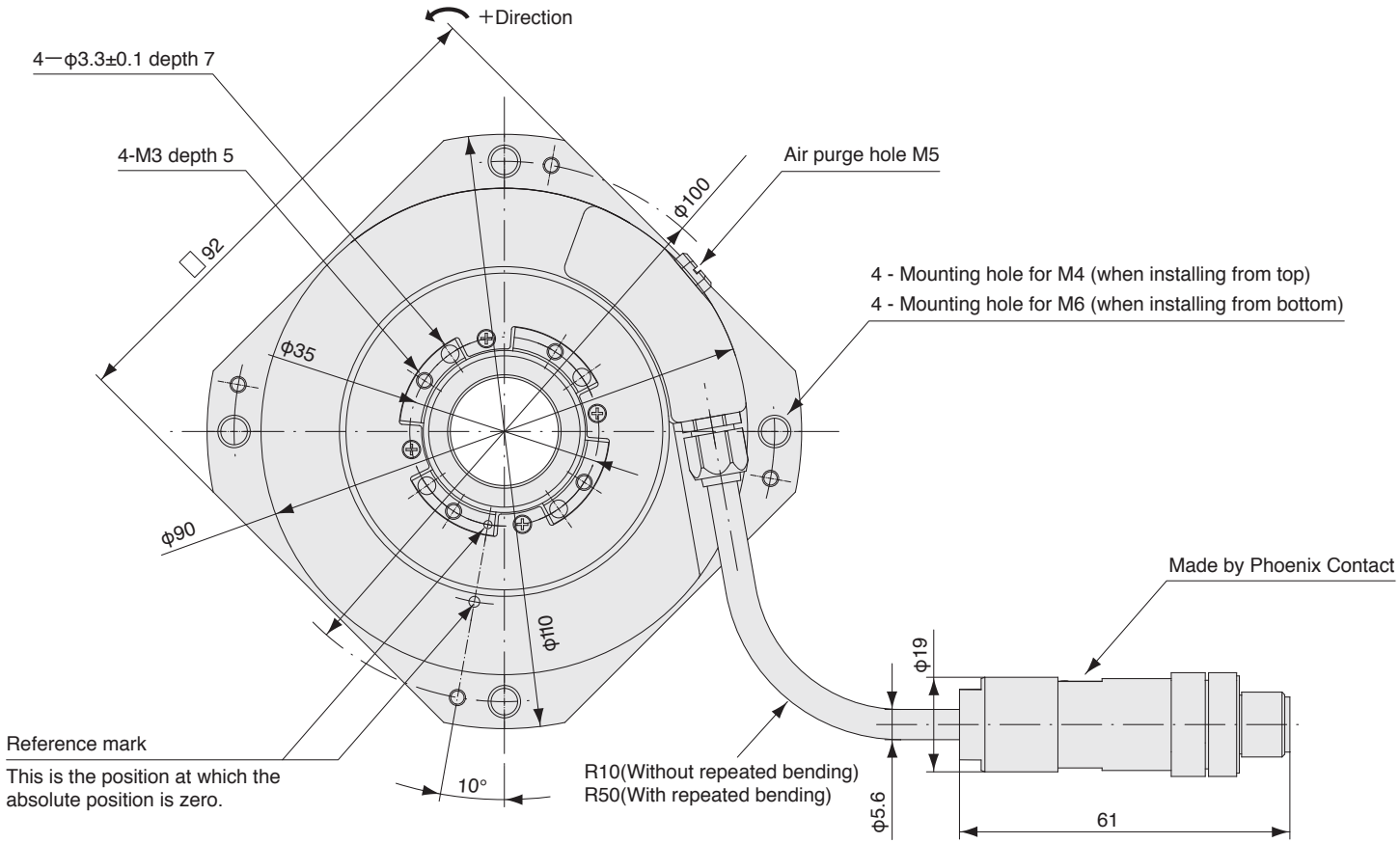

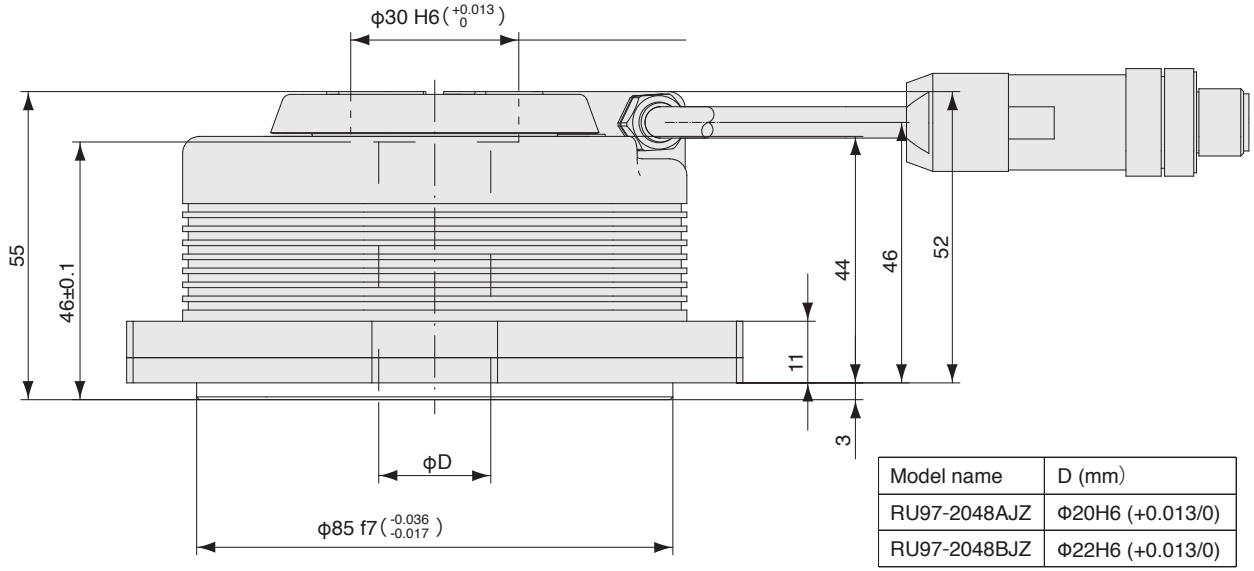

Model name	D (mm)
RU97-2048AJZ	Φ20H6 (+0.013/0)
RU97-2048BJZ	Φ22H6 (+0.013/0)

Unit: mm